TEE 843 – Sistem Telekomunikasi

11. Teknologi Jaringan Akses

Muhammad Daud Nurdin
syechdaud@yahoo.com

Jurusan Teknik Elektro FT-Unimal
Lhokseumawe, 2016

Jaringan Telekomunikasi:

Jaringan Akses dan Jaringan Transmisi

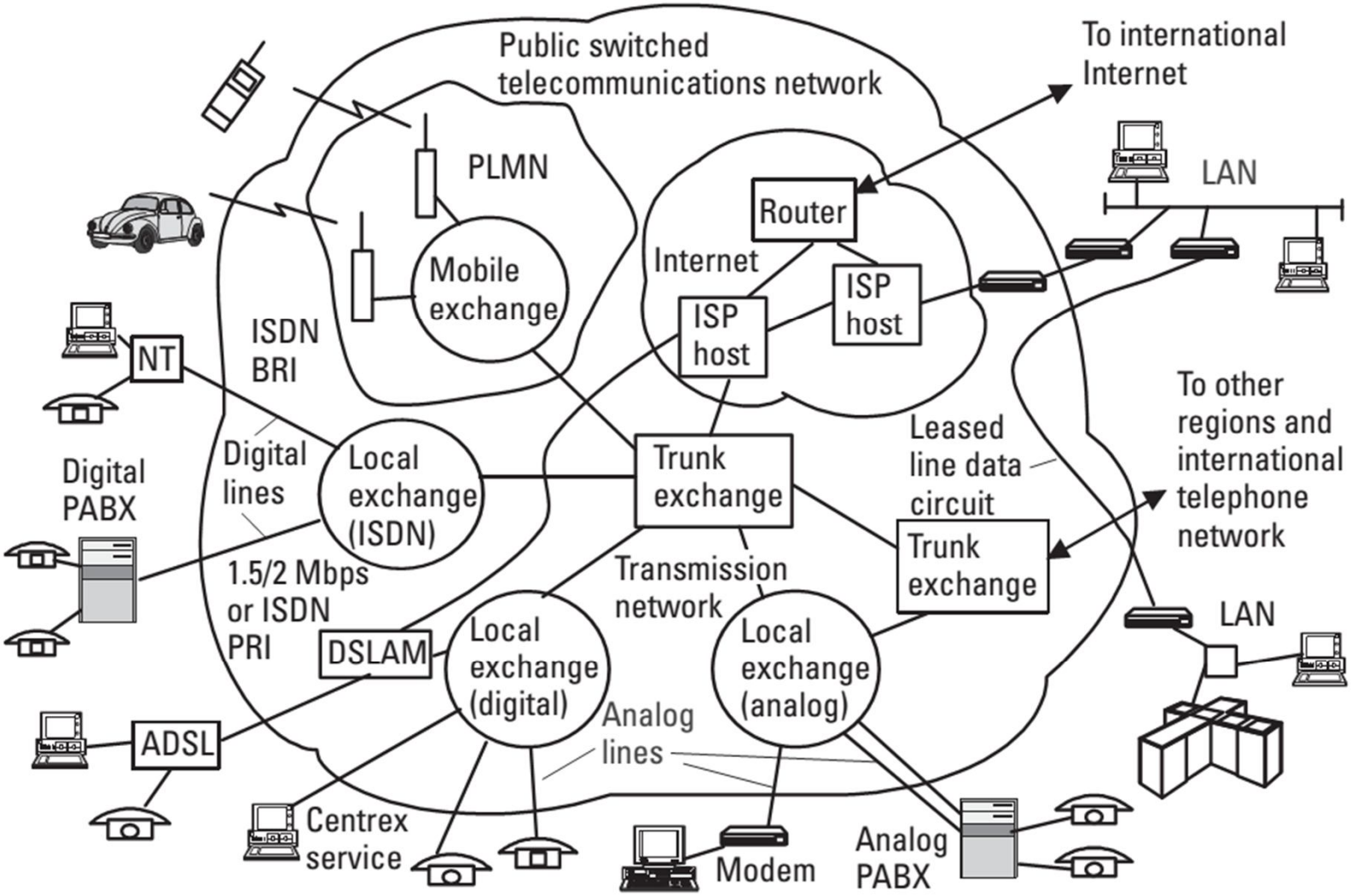

Figure 2.20 Overview of the public switched telecommunications network.

Jaringan Telekomunikasi:

Jaringan Akses dan Jaringan Transmisi

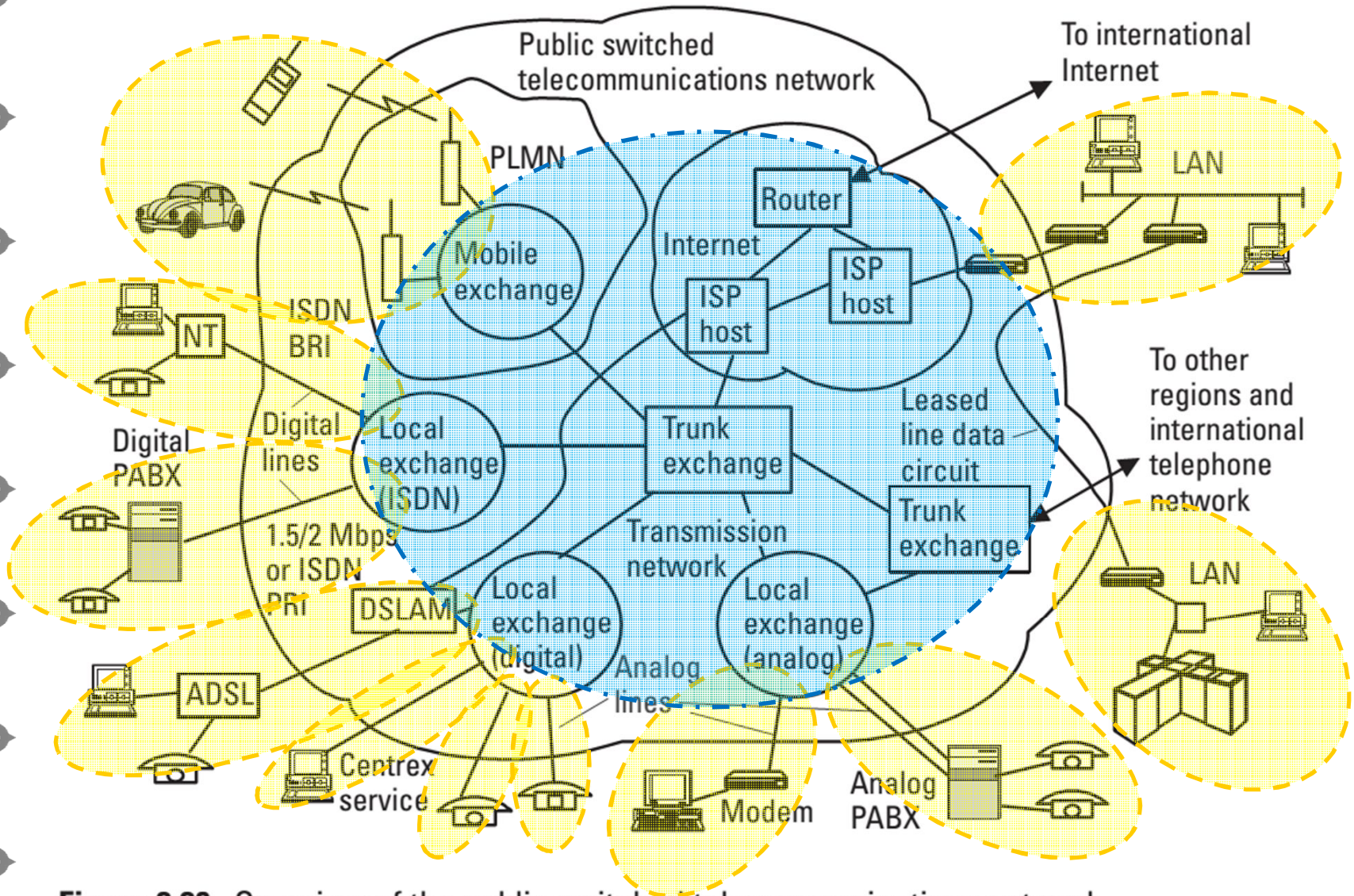

Figure 2.20 Overview of the public switched telecommunications network.

Access Network

- The **access network** provides the connection between the subscriber's premises and the local exchange.
- This connection is commonly referred to as the ***last mile***.
- Technologies used in the access network are:
  - the basic local loop, the fixed wireless local loop, and the digital subscriber loop (forming the PSTN),
  - cellular (forming the PLMN),
  - fiber-based techniques such as fiber to home (FTTH),
  - other broadband access techniques.

Teknologi Jaringan Akses

1. ***Local loop* pada PSTN**
   - Leased Line
   - Voice-Band Modem
   - ISDN
   - DSL
   - Fiber Cable Access
2. Cable TV Network
3. LAN (Local Area Network)
4. Wireless Access

Jaringan Akses pada PSTN

- Jaringan akses/lokal pada PSTN disebut ***local loop*** atau ***subscriber loop.***
- Pada awalnya hanya menyediakan layanan komunikasi suara *(voice communications).*
- Lalu berkembang menyediakan layanan:
  - Leased Line
  - Voice-Band Modems
  - ISDN (Integrated Services Digital Network)
  - DSL (Digital Subscriber Line)
- Klasifikasi dan istilahnya di Indonesia:
  - Jarlokat (jaringan lokal akses tembaga)
  - Jarlokar (jaringan lokal akses radio)
  - Jarlokaf (jaringan lokal akses fiber)

Arsitektur Jarlokat

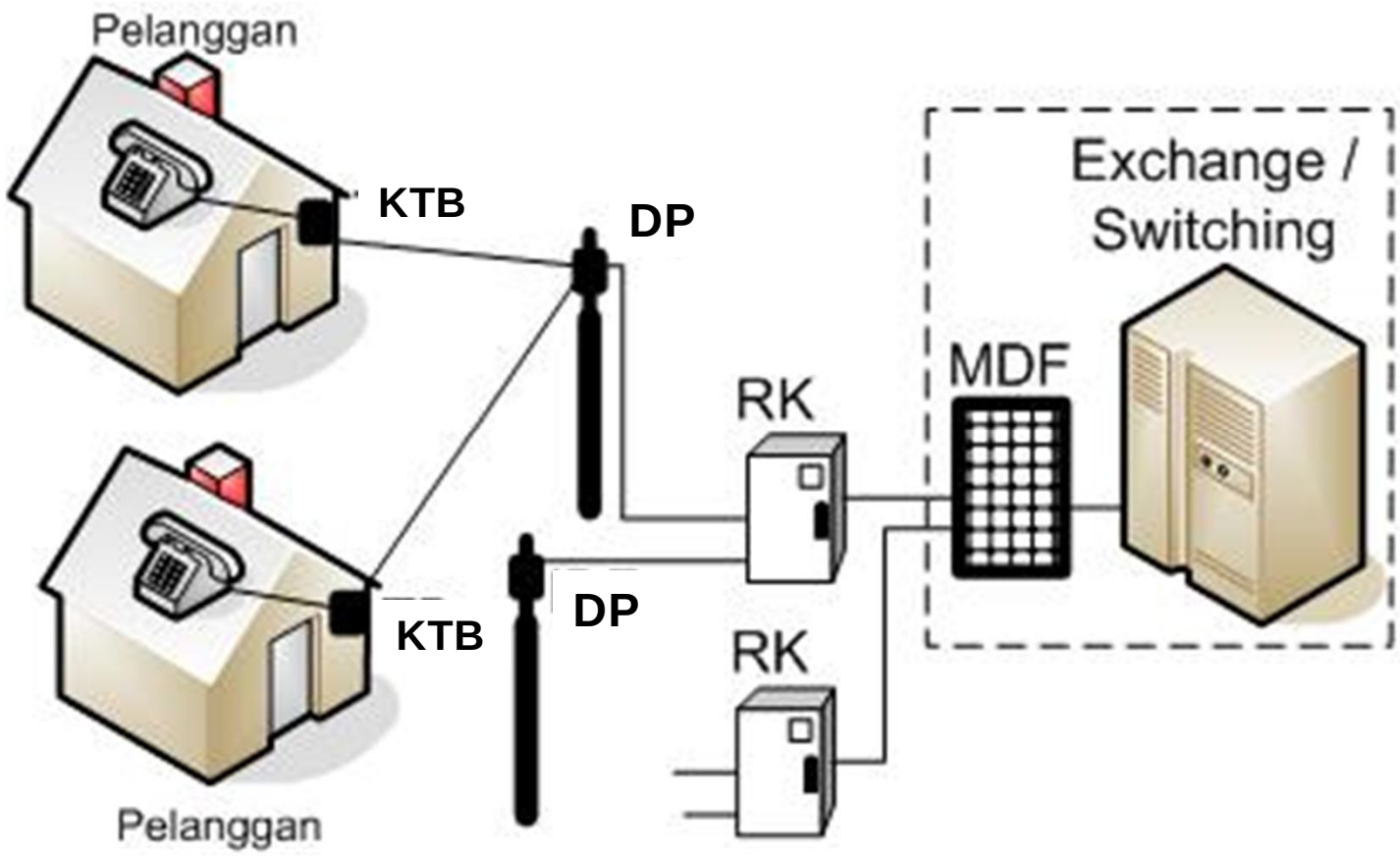

MDF = Main distribution frame;
DP = Distribution point;
RK = Rumah kabel;
KTB = Kotak terminal batas

Leased Line

- The **leased line** is connected all the time, but **dial-up** or switched lines are connected only on demand.
- Leased lines can be used for **voice** (telephone), **data** or Internet services.
- Leased lines are available at speeds of 64 kbit/s, 128 kbit/s, 256 kbit/s, 512 kbit/s, 1 Mbit/s, 2 Mbit/s, 4 Mbit/s, 8 Mbit/s, 16 Mbit/s, T1(1.544 Mbit/s), or E1(2.048 Mbit/s).

Leased Line (lanjutan)

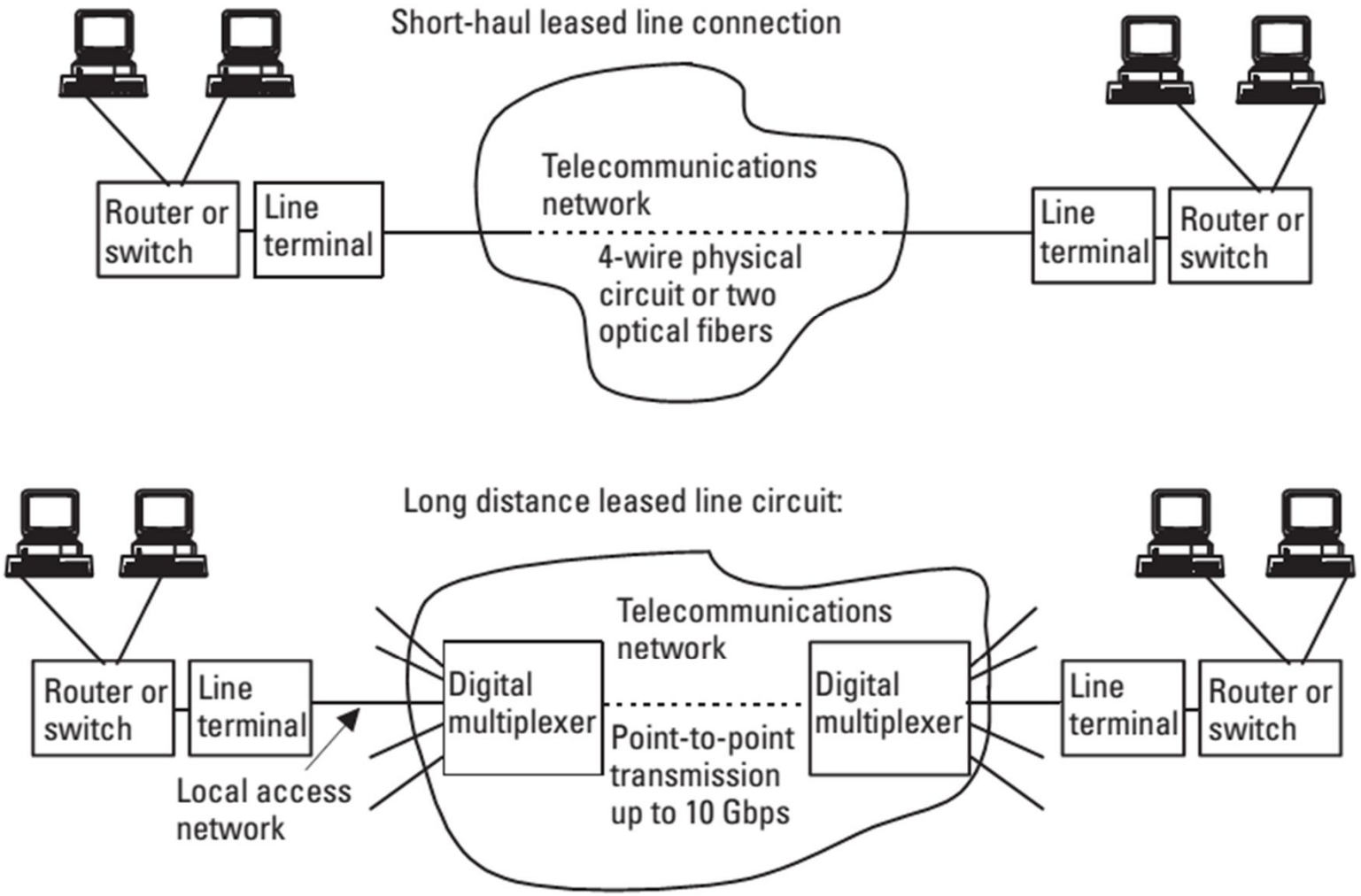

Figure 6.24 Regional and long-distance leased lines.

Voice-Band Modem

- The word **modem** comes from the combination of the two devices, modulator and demodulator.
- **Modulation** converts a digital signal into an analog signal for transmission through a channel, and **demodulation** performs the conversion back to the original digital baseband data signal.
- **Voice-band modems** are needed when an analog voice channel of the telephone network is used for **data transmission**.
- The **frequency band** of the voice channel is 300 to 3,400 Hz and the baseband digital information is transferred to this band through CW modulation.

Voice-Band Modem (lanjutan)

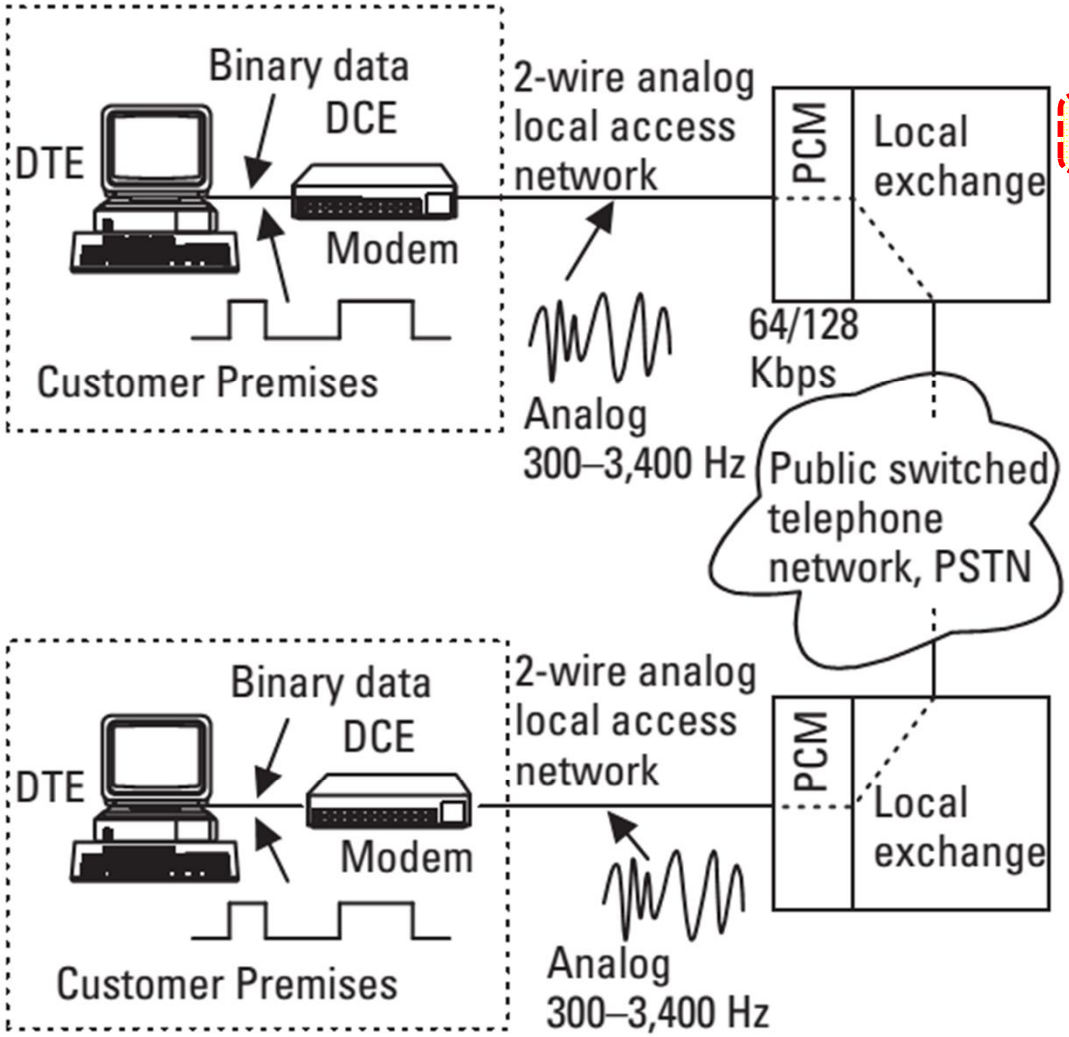

Modem = Modulator + Demodulator

Modem converts the digital signal into an analog signal for transmission through the voice channel of PSTN.

The amplitude, frequency, and/or phase of the carrier wave carry the values of the digital signal to the receiving end.

The demodulator of the modem converts amplitude, frequency, and/or phase into the values of the digital signal.

DTE = Data terminal equipment
DCE = Data circuit terminating equipment or data communications equipment
PCM = Pulse code modulation

Figure 6.13 Modem link over the PSTN.

Integrated Services Digital Network (ISDN)

- **ISDN** is a set of communication standards for simultaneous digital transmission of voice, video, data, and other network services over the traditional circuits of the PSTN.
- The key feature of ISDN is that it integrates **speech** and **data** on the same lines.
- The ISDN provides switched end-to-end digital n×64 kbps circuits that we can use for voice or data.
  - Basic rate interface (BRI) = 2B + D = (2x64 + 16) kbps = 144 kbps
  - Primary rate interface (PRI)

    Eropa, PRI = 30B + 2D = (32x64) kbps = 2,048 Mbps

    Amerika, PRI = 23B + D + framing= (24x64 + 8) kbps = 1,544 MBps

ISDN (lanjutan)

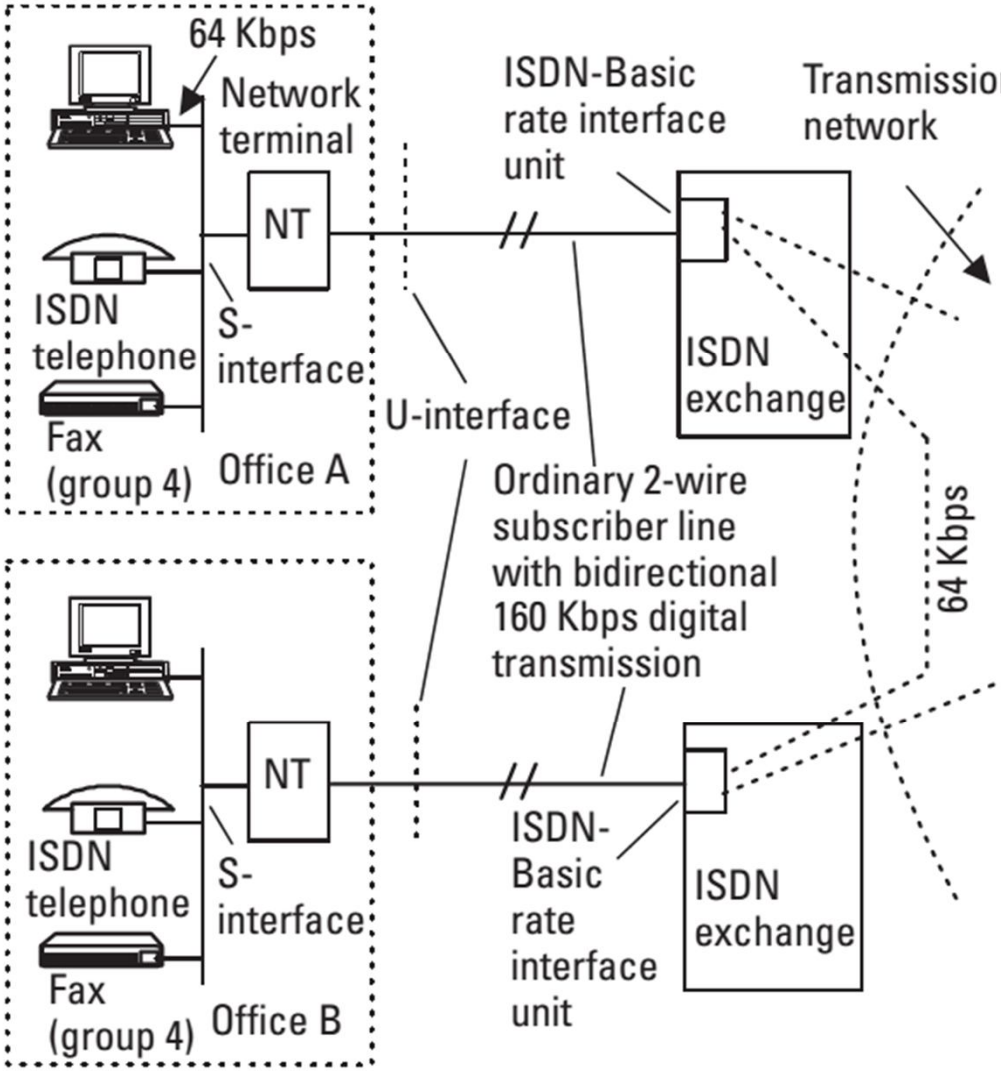

Basic rate interface, BRI, 2B+D: Two bearer channels (B) at 64 Kbps and one signaling channel (D) at 16 Kbps, 2B+D, totally 144 Kbps. The framing information increases data rate on a subscriber line to 160 Kbps.

Maximum 8 subscriber devices may be connected to NT and two of them may communicate at the same time

Primary rate interface, PRI: European PRI: 30 bearer channels, one signaling channel and framing, all at 64 Kbps make up data rate of 2.048 Mbps. Framing structure is the same as in ordinary 2 Mbps PCM. American PRI: 23B+D plus framing, 1.544 Mbps.

Digital Subscriber Line (DSL)

- In the DSL (*digital subscriber line* or *digital subscriber loop*) techniques, **data** and **speech** are separated at the local exchange site.
- The **speech** portion is connected to the switching (PSTN).
- The **data** portion is connected to the data network for Internet access.
- **Applications of DSL**: remote access to data center, Internet access, and interconection of LANs.
- Term **xDSL** refers to different variations of DSL, such as ADSL, HDSL, and RADSL.

DSL (lanjutan)

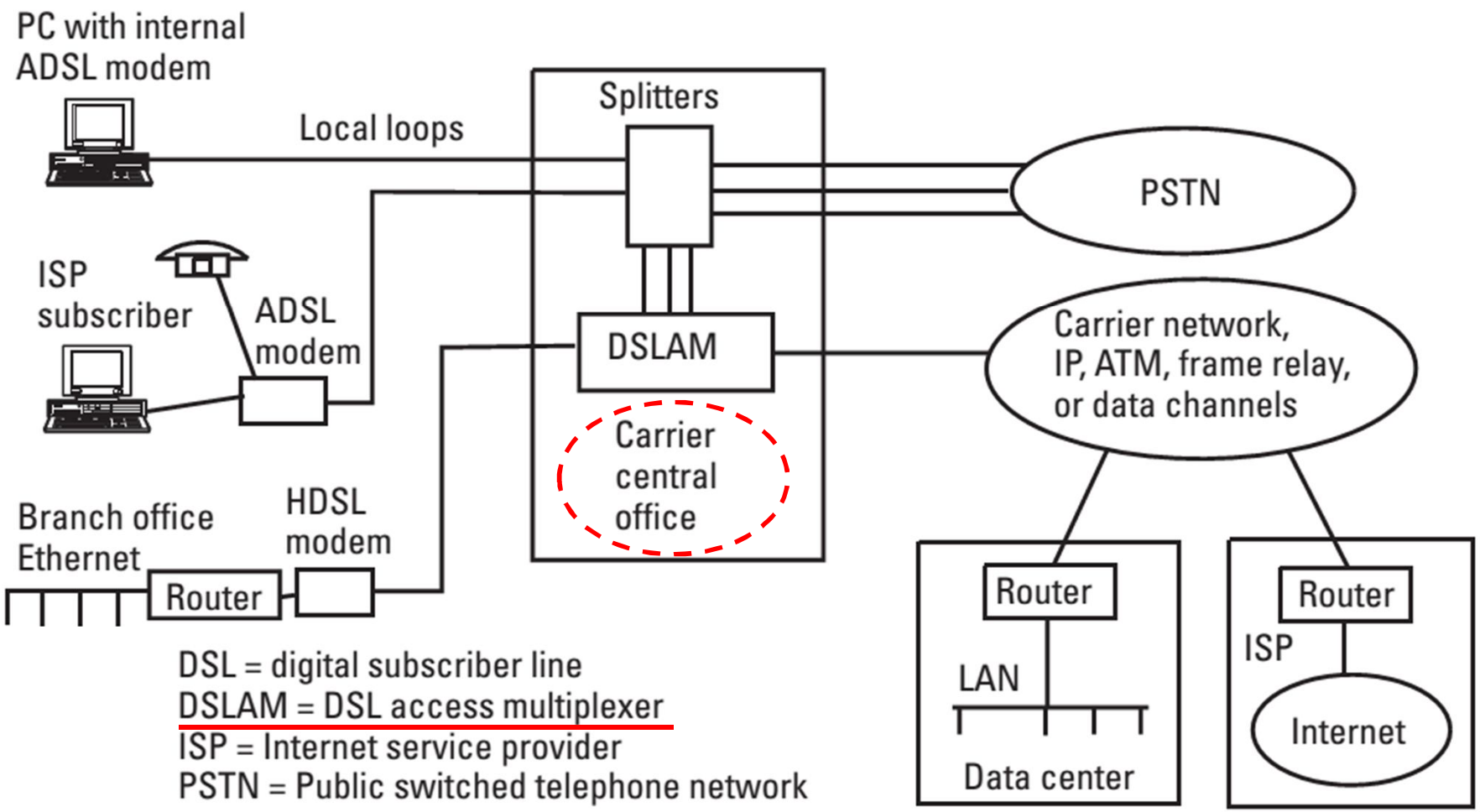

Figure 6.16 DSL in the local loop.

DSL (lanjutan)

Table 6.1

DSL Technologies, Access Distances, and Service Rates

DSL Technology	Reach (km)	Downstream Data Rate	Upstream Data Rate	Analog Phone	Market
IDSL	8	144 Kbps	144 Kbps	No	Residential
G.lite ADSL	5	1.5 Mbps	640 Kbps	Yes	Residential
HDSL	4	2/1.5 Mbps	2/1.5 Mbps	No	SME*
SDSL, G.shdsl	5–6	2.3 Mbps	2.3 Mbps	No	SME
G.dmt ADSL	3	...8 Mbps	...1.5 Mbps	Yes	Residential
					SME
VDSL	0.1–2	...52 Mbps	6 Mbps	Yes	Residential
		(34 Mbps)	(34 Mbps)		SME

*SME = small and medium size enterprises.

DSL (lanjutan)

Technology	Transmission	No. of Pairs	Maximum Bandwidth		
			Upstream	Downstream	
SDSL – Symmetric DSL	Symmetric	1 to 3	2 Mbps	2 Mbps	1st Generation Broadband
HDSL – High Speed DSL	Symmetric	1	2 Mbps	2 Mbps	
ADSL – Asymmetric DSL	Asymmetric	1	640 kbps	8 Mbps	
ADSL 2 – Asymmetric DSL	Asymmetric	1	640 kbps	12 Mbps	2nd Generation Broadband
**ADSL 2+ – Asymmetric DSL	Asymmetric	1	1.2 Mbps	25 Mbps	
VDSL – Very High Speed DSL	Symmetric	1	52 Mbps	52 Mbps	
	Asymmetric	1	16Mbps	52 Mbps	
VDSL2	Symmetric	1	100 Mbps	100 Mbps	
	Asymmetric	1	16 Mbps	100 Mbps	

Teknik Modulasi pd DSL

- Baseband transmission
  - Pulse amplutude modulation (PAM), misalnya 2B1Q coding.
- Passband transmission
  - Single carrier modulation:
    - Quadrature amplitude modulation (QAM)
    - Carrierless amplitude and phase (CAP)
  - Multicarrier modulation (MCM):
    - Discrete multitone (DMT)
    - Discrete wavelet multitone (DWMT)

Implementasi Konsep DMT

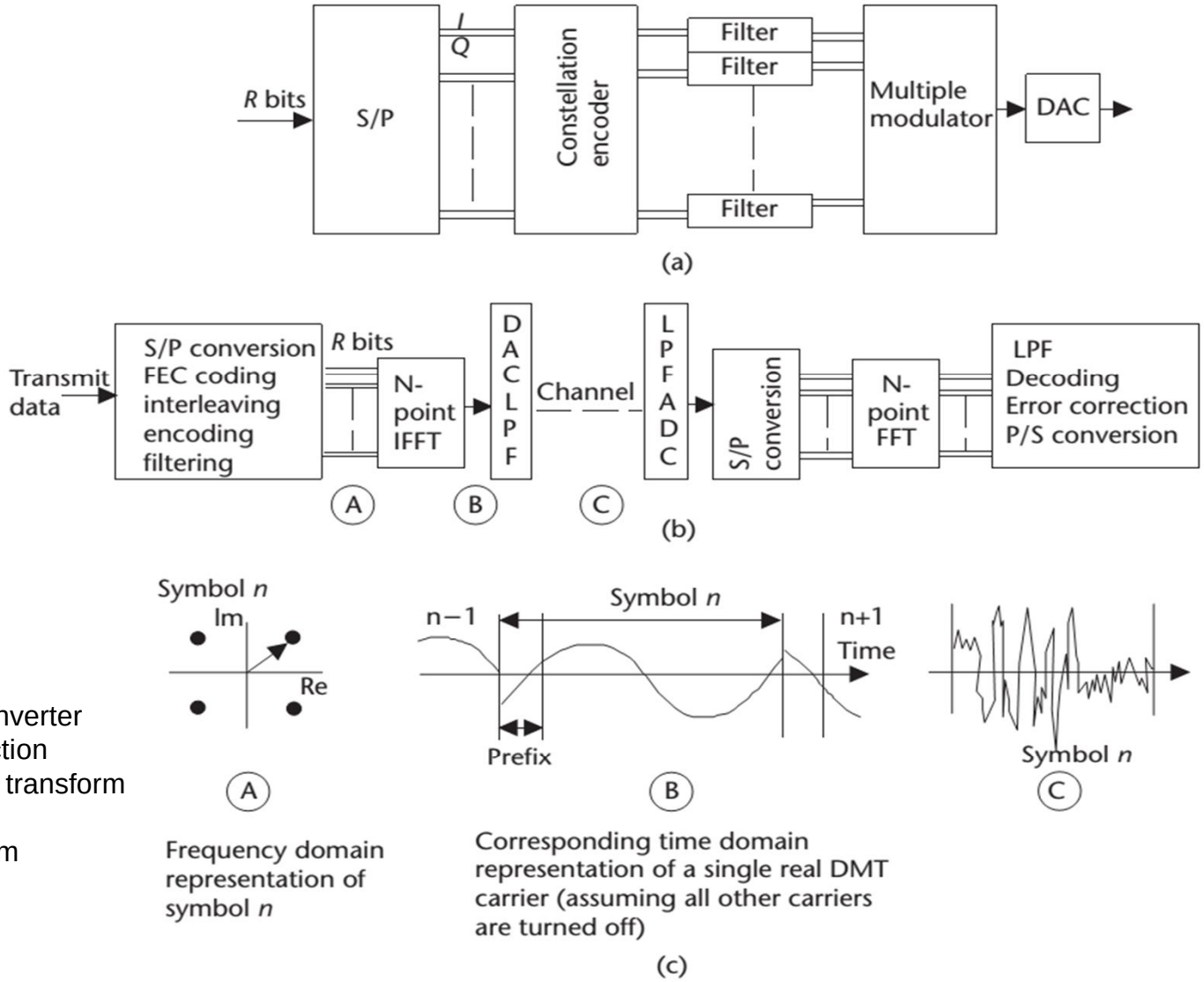

S/P = serial-to-parallel
DAC = digital-to-analog converter
FEC = forward error correction
IFFT = inverse fast Fourier transform
LPF = low pass filter
FFT = fast Fourier transform
P/S = parallel –to-serial

Figure 6.13 Multitone concept implementation: (a) block diagram of a MCM transmitter, (b) basic multicarrier modem, and (c) transmit signal from the DMT modem (*Source:* [1], reproduced with permission of the IEE).

Spektrum Sinyal ADSL

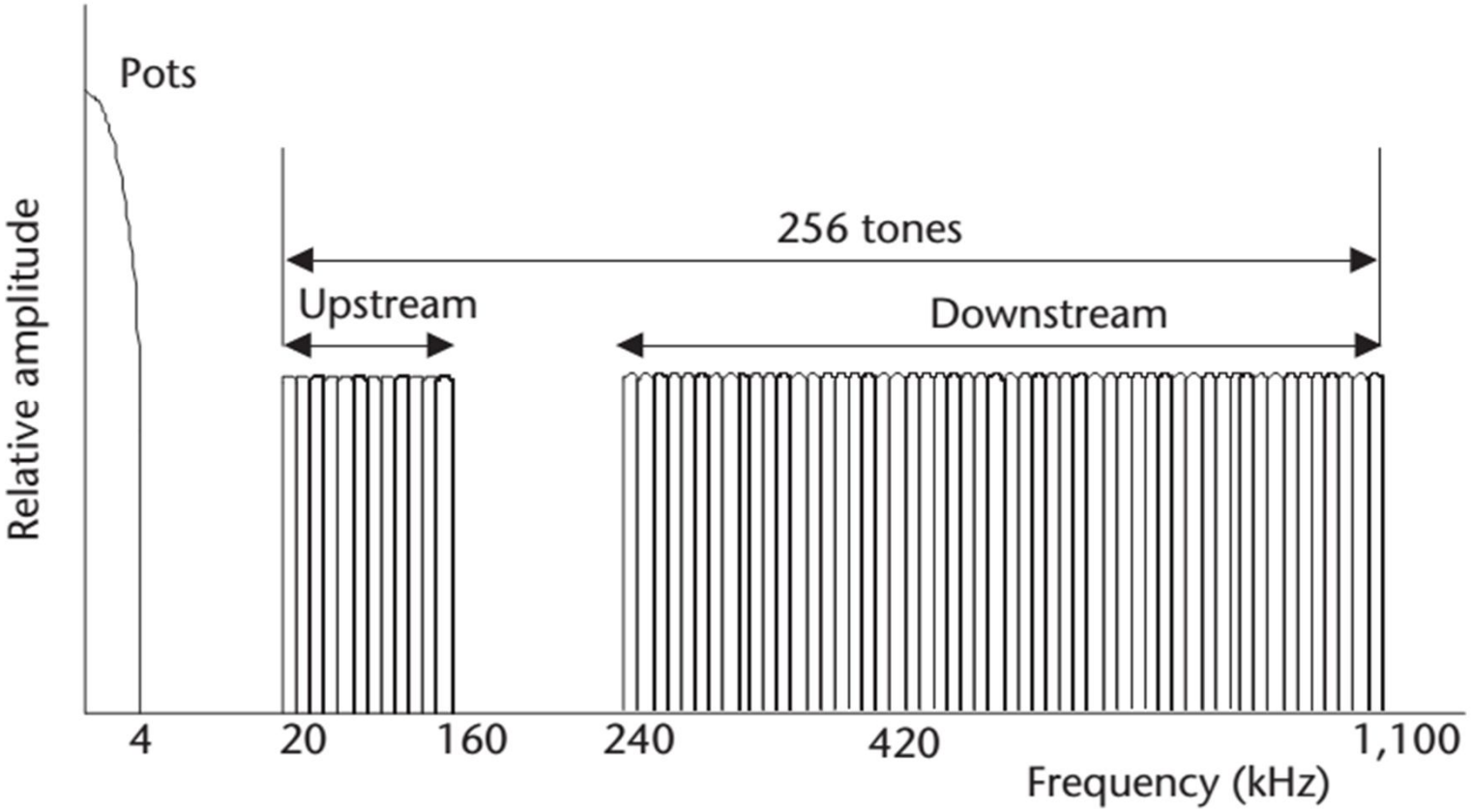

Fiber Cable Access

Fiber to the *x* (FTTX) is including:

- *fiber-to-the-node* (FTTN)
- *fiber-to-the-curb* (FTTC)
- *fiber-to-the-building* (FTTB)
- *fiber-to-the-home* (FTTH)

FFTX

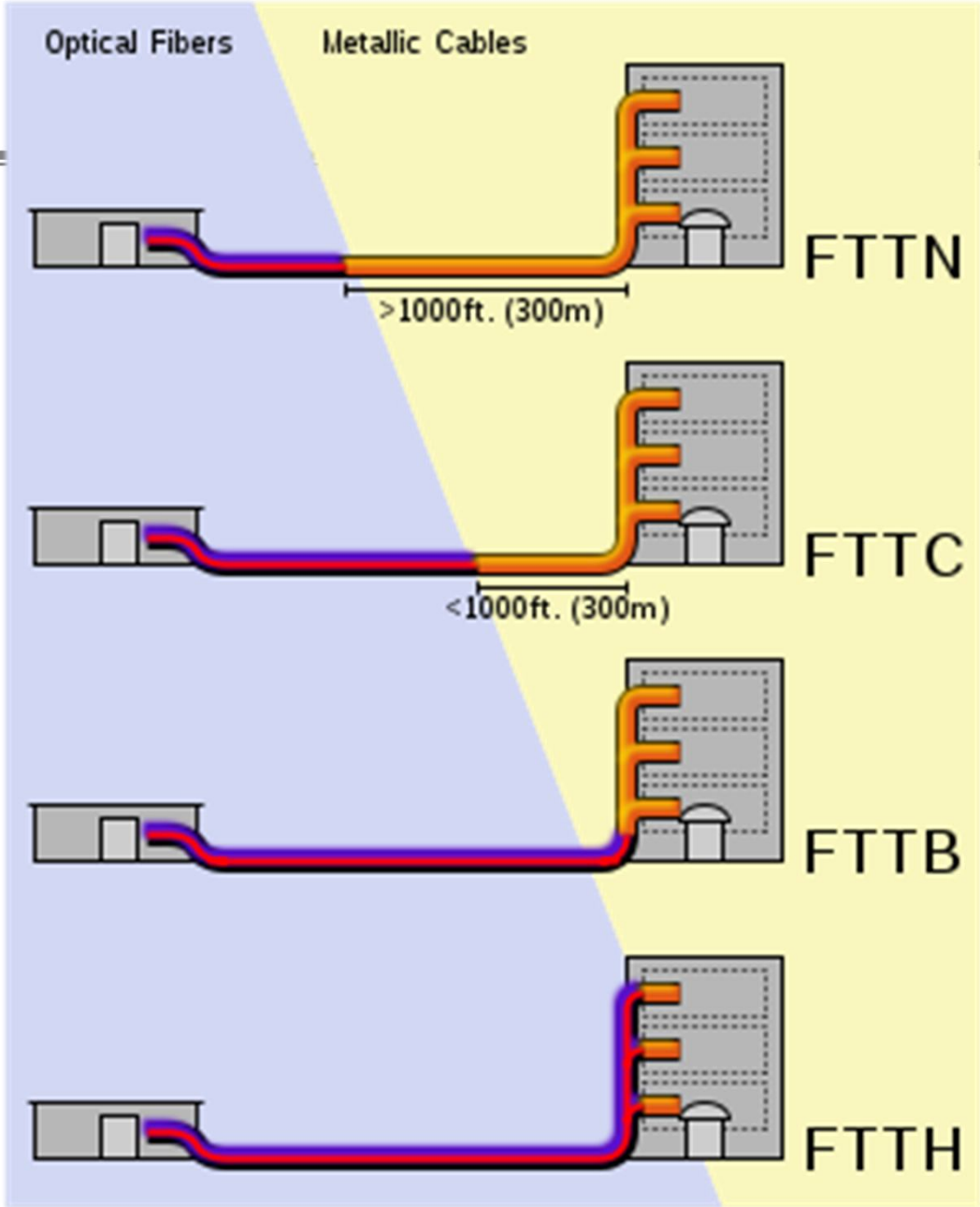
Optical Fibers
Metallic Cables
>1000ft. (300m)
FTTN
<1000ft. (300m)
FTTC
FTTB
FTTH

Teknologi Jaringan Akses

1. *Local loop* pada PSTN
   - Leased Line
   - Voice-Band Modem
   - ISDN
   - DSL
   - Fiber Cable Access
2. **Cable TV Network**
3. LAN (Local Area Network)
4. Wireless Access

Cable TV Network

- Jaringan TV kabel adlh jaringan televisi berbayar yg layanan utamanya menyediakan layanan siaran televisi.
- Dlm perkembangannya kemudian dpt dipakai juga utk akses komunikasi data.
- Medium transmisinya utk distribusi siaran TV ke pelanggan-pelanggan biasanya berupa fiber optik dan kabel coaxial.
- Link satelit dipakai oleh provider utk menerima siaran TV dari stasiun televisi.
- Namun, di lapangan televisi berbayar yg pelanggannya langsung menerima siaran dari satelit terkadang juga disebut TV kabel.

Jaringan TV Kabel

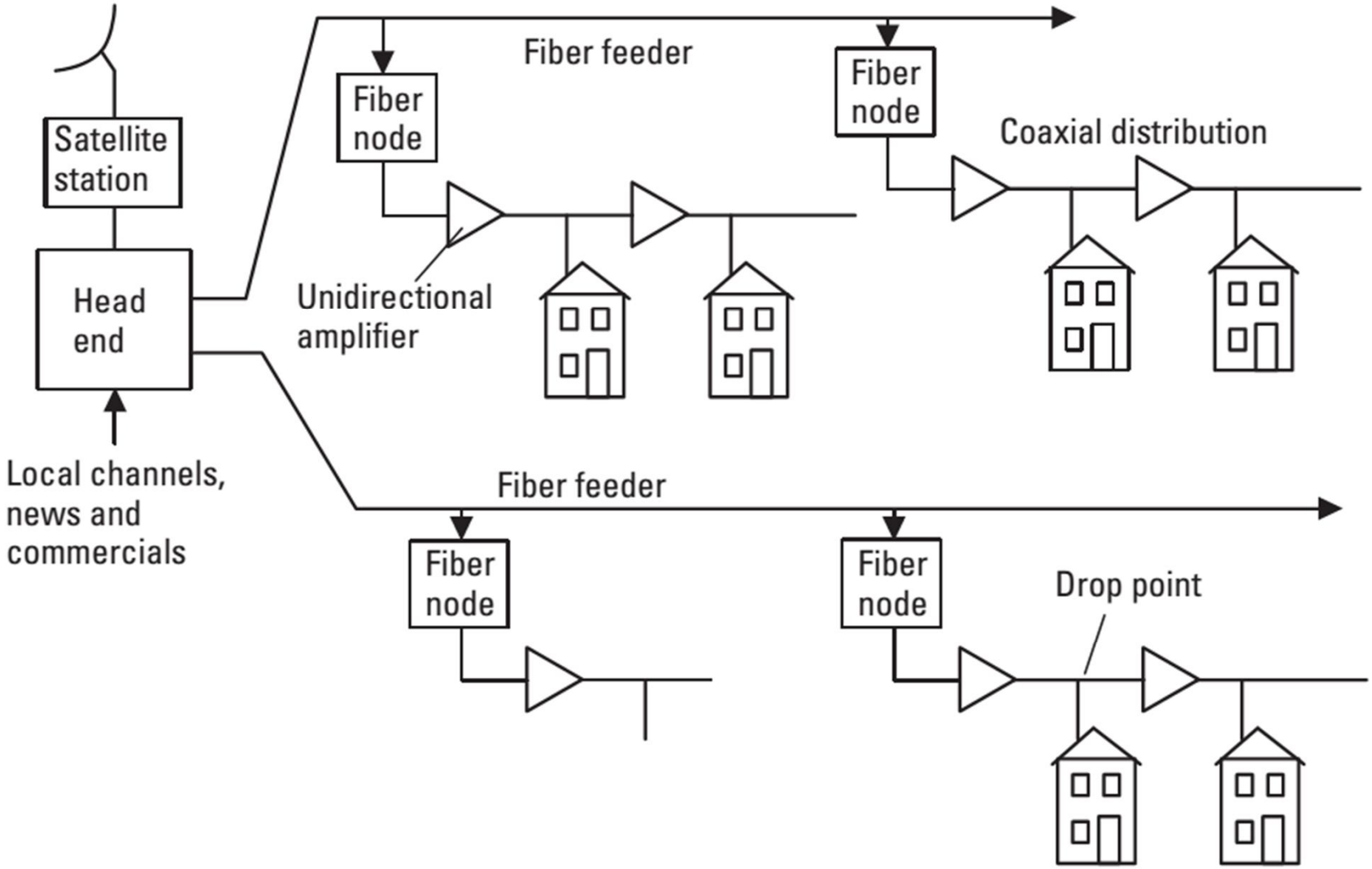

Figure 6.22 Traditional cable TV plant.

Jaringan TV Kabel plus Komunikasi Data

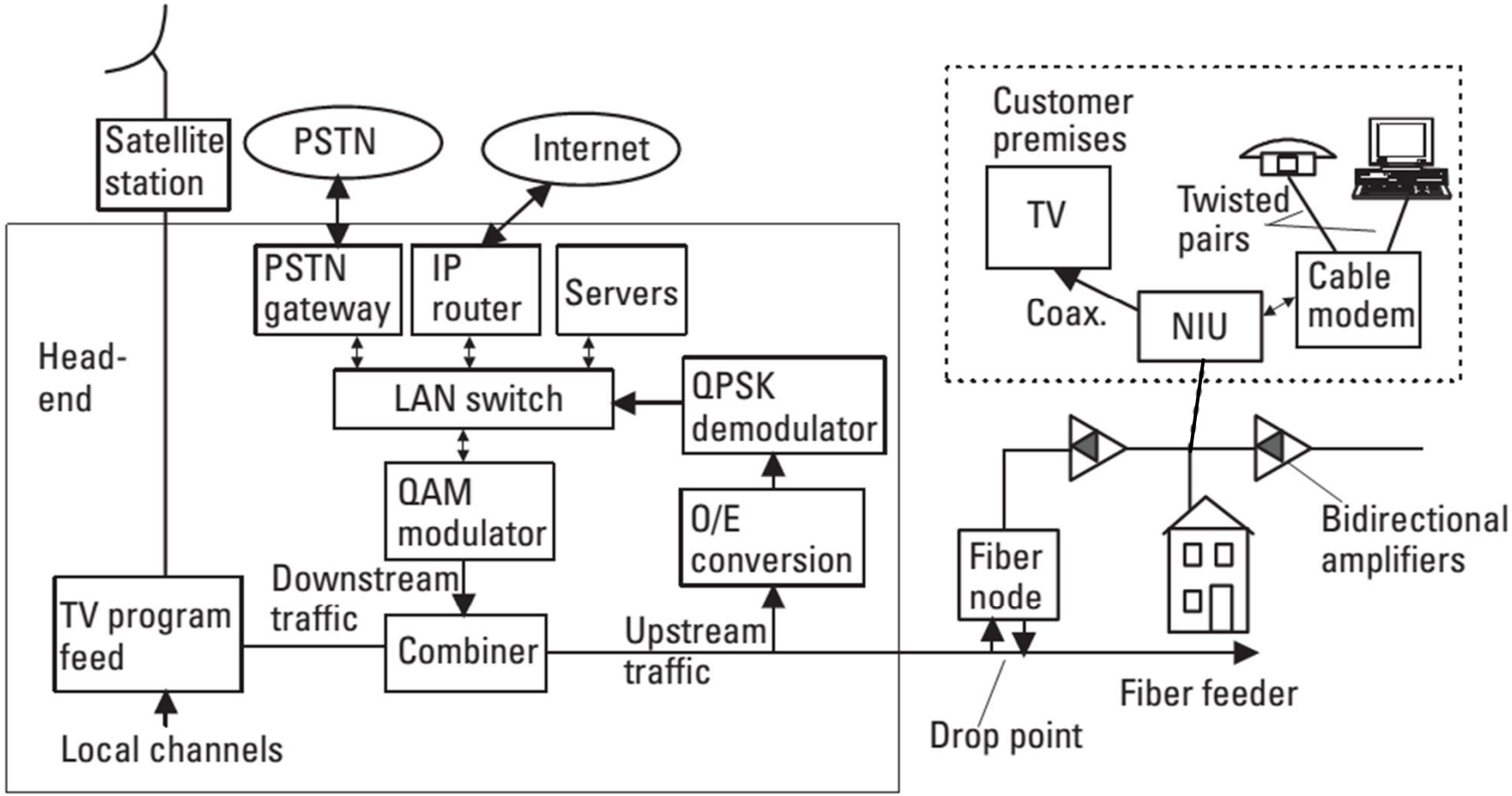

Figure 6.23 Cable TV plant modified for cable modem service.

Teknologi Jaringan Akses

1. *Local loop* pada PSTN
   - Leased Line
   - Voice-Band Modem
   - ISDN
   - DSL
   - Fiber Cable Access
2. Cable TV Network
3. **LAN (Local Area Network)**
4. Wireless Access

Local Area Network (LAN)

- **LANs** provide **high-data-rate communications between computers**, for example, inside one building.
- Because of the high transmission capacity (10 Mbps or higher) only **short distances** are allowed. The typical maximum transmission distance is a few hundred meters.
- **LANs can be interconnected** to make up a wide-area corporate network using switching devices (switches or bridges) or routers.
- The **bridges** or **switches** interconnect separate LAN segments and switch frames from one segment to another with the help of a local hardware address that is stored in the interface unit of each computer.
- **Routers** are devices that use network layer addresses for the routing of packets and they are used to connect LANs to other networks, for example, to the Internet. Routers can also be used to interconnect LANs that use different technologies.

Two Basic Structures of LANs

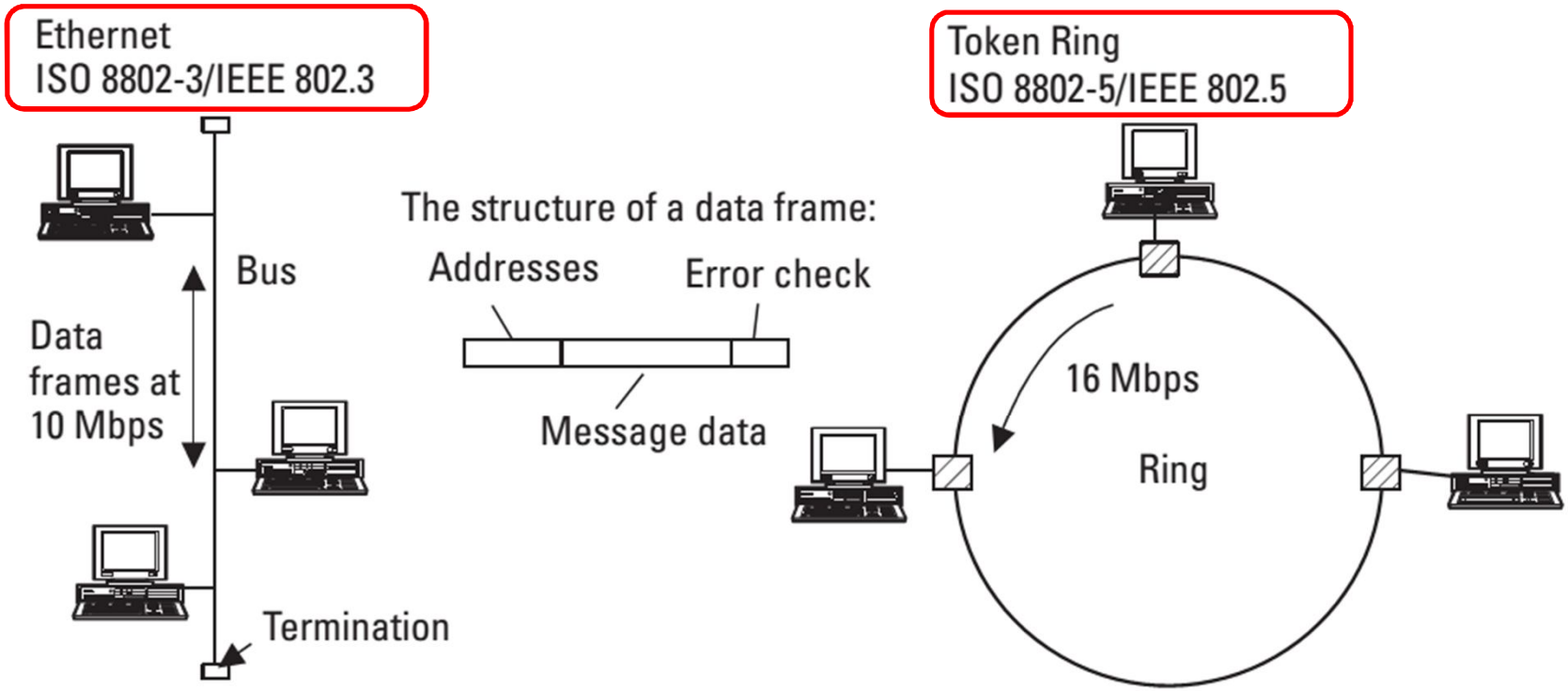

Figure 6.25 LAN structure.

LANs Protocols

- Special protocols are standardized to make sure that only one computer transmits at a time.
- The complex standards of LANs specify OSI **layer 1**, the physical layer, and the so-called medium access sublayer (MAC) of **layer 2** (the data link layer).
- The basic task of these protocols is to connect acomputer to another via a shared medium as if they were connected by a point-to-point cable.
- The most common LAN is the **Ethernet**, which has been standardized as ISO 8802-3 or ANSI/IEEE 802-3.
- An Ethernet LAN is logically a **bus** although its physical structure is often a **star** where all stations are connected to wiring center called a **hub**.

LANs Protocols (lanjutan)

- Another common LAN is the **token ring**, developed by IBM, and it is standardized as ISO 8802-5 or IEEE 802-5.
- The typical data rate of this LAN is 16 Mbps.
- In a token ring network, only a computer holding a special short frame called a **token** is able to transmit to the ring.
- Physically the token ring is always built as a **star** although logically it still makes up a ring.
- The token ring has some technical **advantages** over the Ethernet (no collisions, better bandwidth utilization, and deterministic operation) but it is much more complicated because of the token management and thus more expensive.

Multiple-Access Scheme of the Ethernet

- The MAC layer in the **Ethernet** is defined in ISO 8802-3/ IEEE 802.3 and this access method is called **CSMA/CD**.
- **Carrier sense (CS)** means that a workstation senses the channel and does not transmit if it is not free.
- **Multiple access (MA)** means that many workstations share the same channel.
- **Collision detection (CD)** means that each station is capable of detecting a collision that occurs if more than one station transmits at the same time. In the case of a collision, the workstation that detects it immediately stops transmitting and transmits a burst of random data to ensure that all other stations detect the collision as well.

Frame Structure of the Ethernet

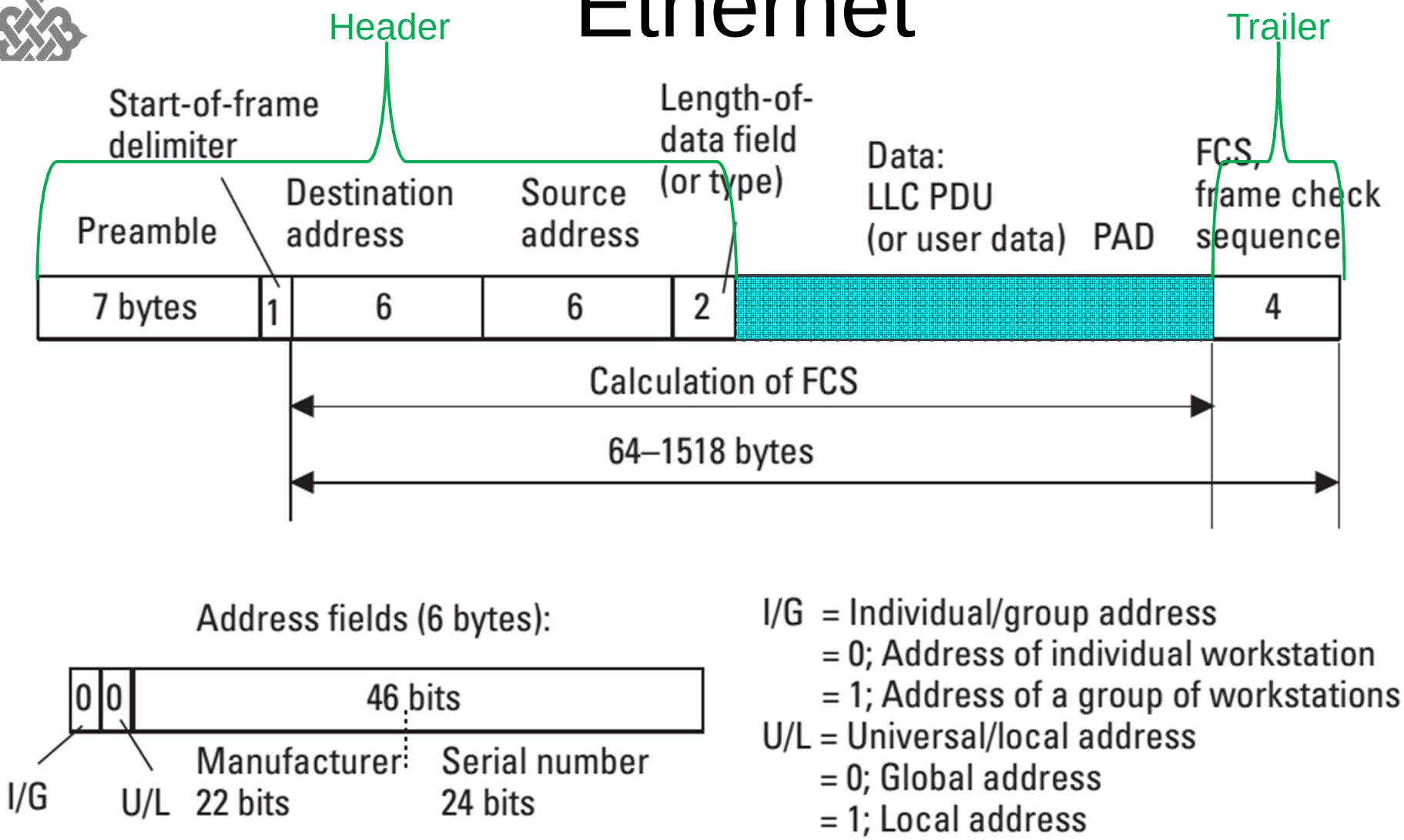

Figure 6.27 Frame structure of the Ethernet (MAC).

Hub untuk Ethernet

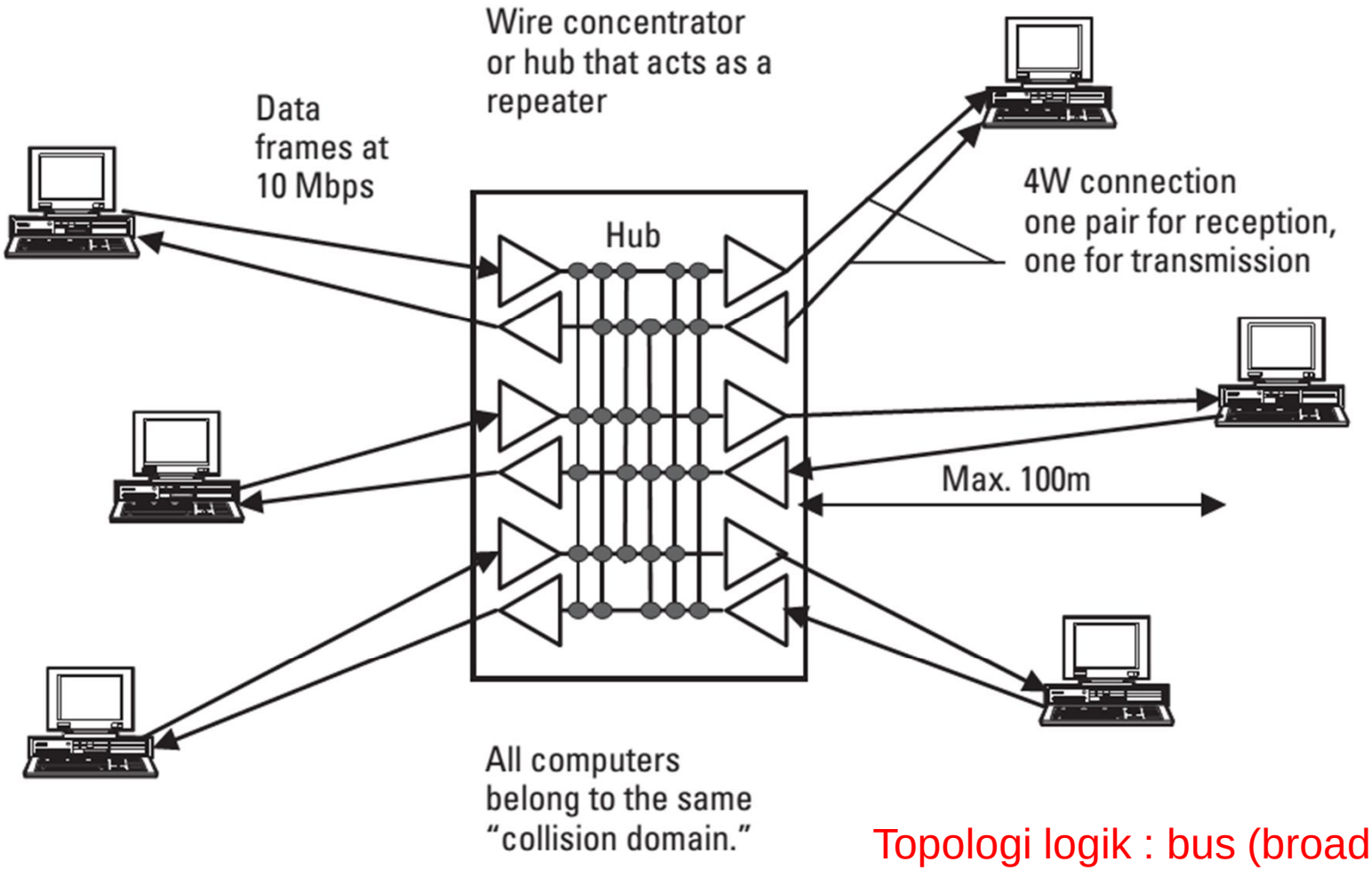

Topologi logik : bus (broadcast)
Topologi fisik : star

Figure 6.31 Twisted-pair shared media CDMA/CD.

Switched Ethernet

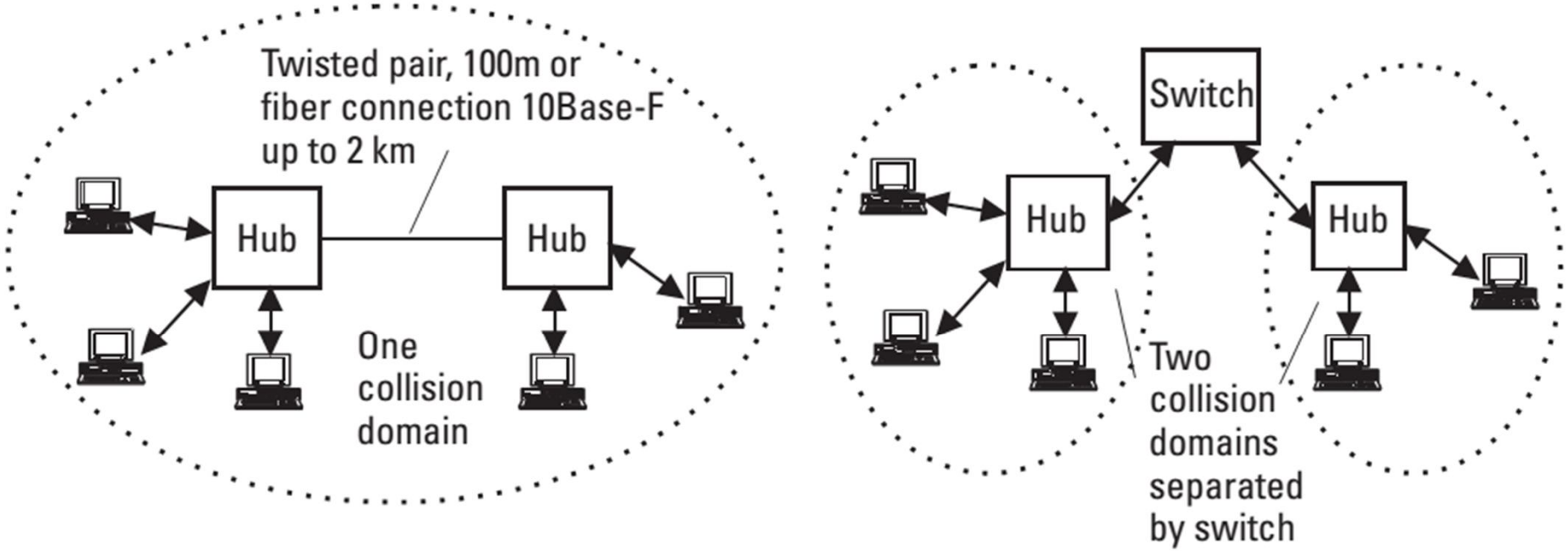

Figure 6.32 Network extension with and without a switch.

Switched Ethernet (lanjutan)

Switching table is updated if the source address in a received frame is unknown or binded to a different port. If no frames from the host are received for a certain period of time, its address is cleared from the table.

Data link layer address table

MAC address:	Port
080020000001	1
080020000002	1
080020000003	1
080020000008	2
080020000007	3

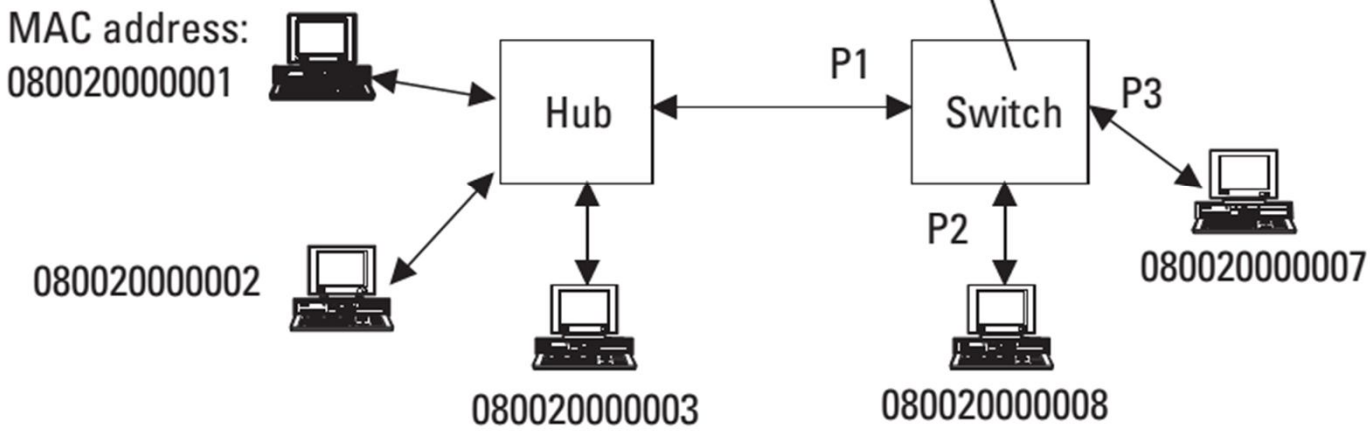

Figure 6.33 Address or switching table of an autolearning switch.

Twisted Pair Cables for Ethernet

Table 6.2

Preferential Order of Ethernet Technologies on Twisted Pair

Technology	Mode	Throughput/ Connection	Media
1000BaseTX	Full duplex	2 × 1 Gbps	4p UTP 5
1000BaseTX	Half duplex	1 Gbps	4p UTP 5
100BaseTX	Full duplex	2 × 100 Mbps	2p UTP 5/STP
100BaseT2	Half duplex	100 Mbps	2p UTP 3/4/5
100BaseT4	Half duplex	100 Mbps	4p UTP 3/4/5
100BaseTX	Half duplex	100 Mbps	2p UTP 5/STP
10BaseT	Full duplex	2 × 10 Mbps	2p UTP 3/4/5
10BaseT	Half duplex	10 Mbps	2p UTP 3/4/5

Ethernet networking

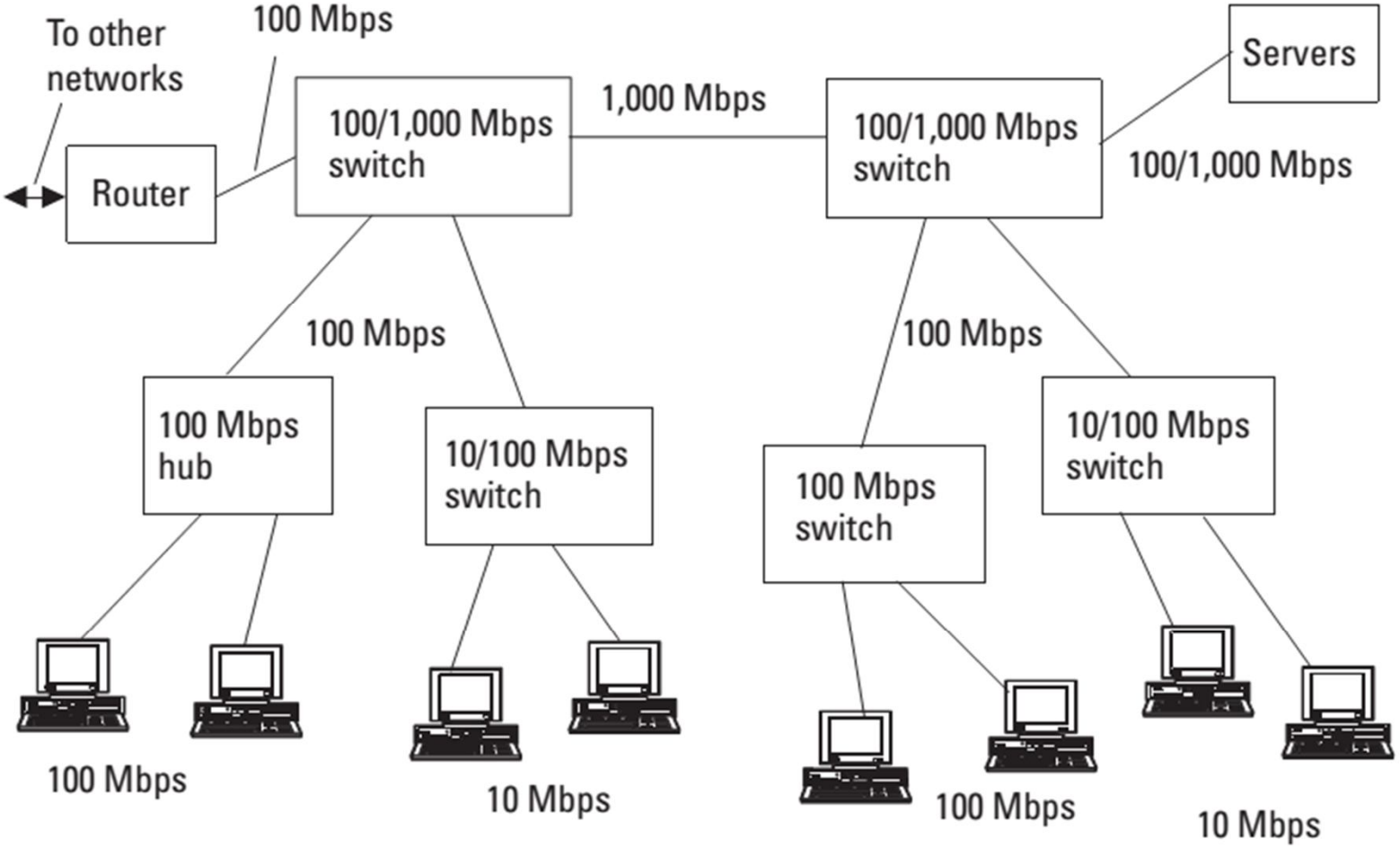

Figure 6.35 Ethernet network operating at 10, 100, and 1,000 Mbps.

Teknologi Jaringan Akses

1. *Local loop* pada PSTN
   - Leased Line
   - Voice-Band Modem
   - ISDN
   - DSL
   - Fiber Cable Access
2. Cable TV Network
3. LAN (Local Area Network)
4. **Wireless Access**

Wireless Access

Jaringan Akses Nirkabel *(Wireless)* dpt berupa:

- Radio access network on PLMN (cellular systems)
- Mobile Satellites Communications
- WLL (Wireless Local Loop)
- Wireless LAN
- WiMAX (Worldwide Interoperability for Microwave Access)

Cellular Systems

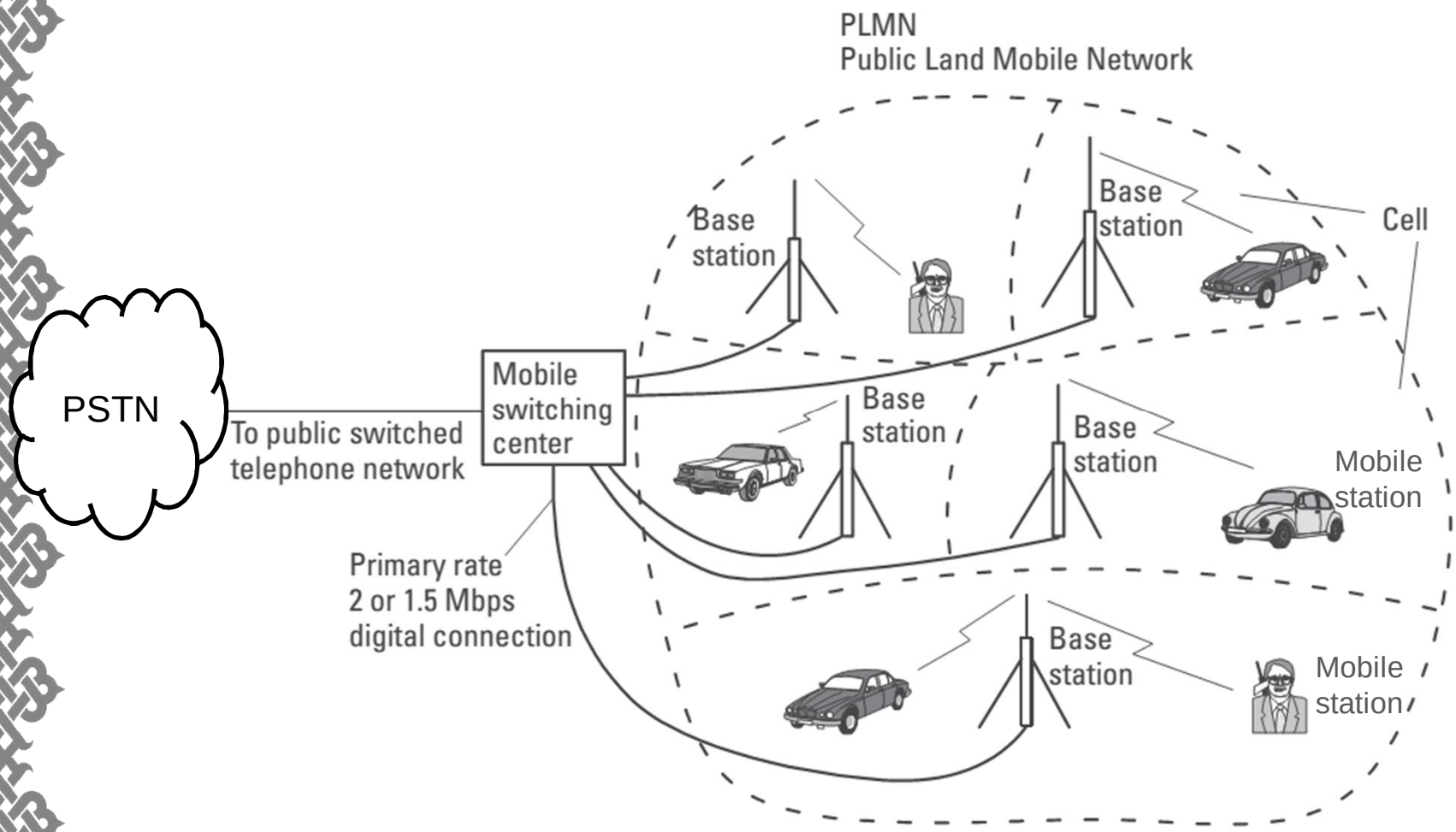

Evolution of Digital Cellular Standards

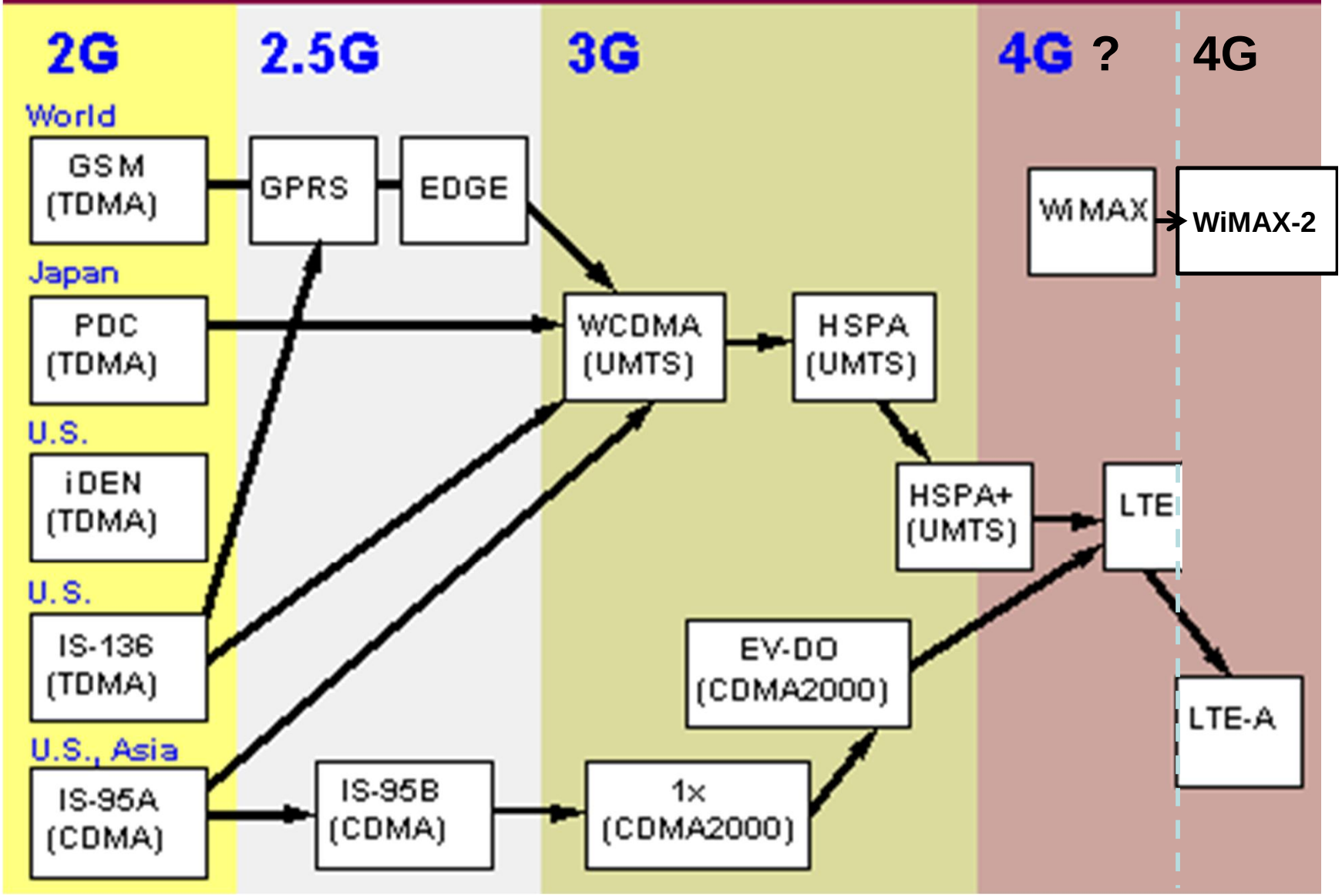

Mobile Satellites Communications

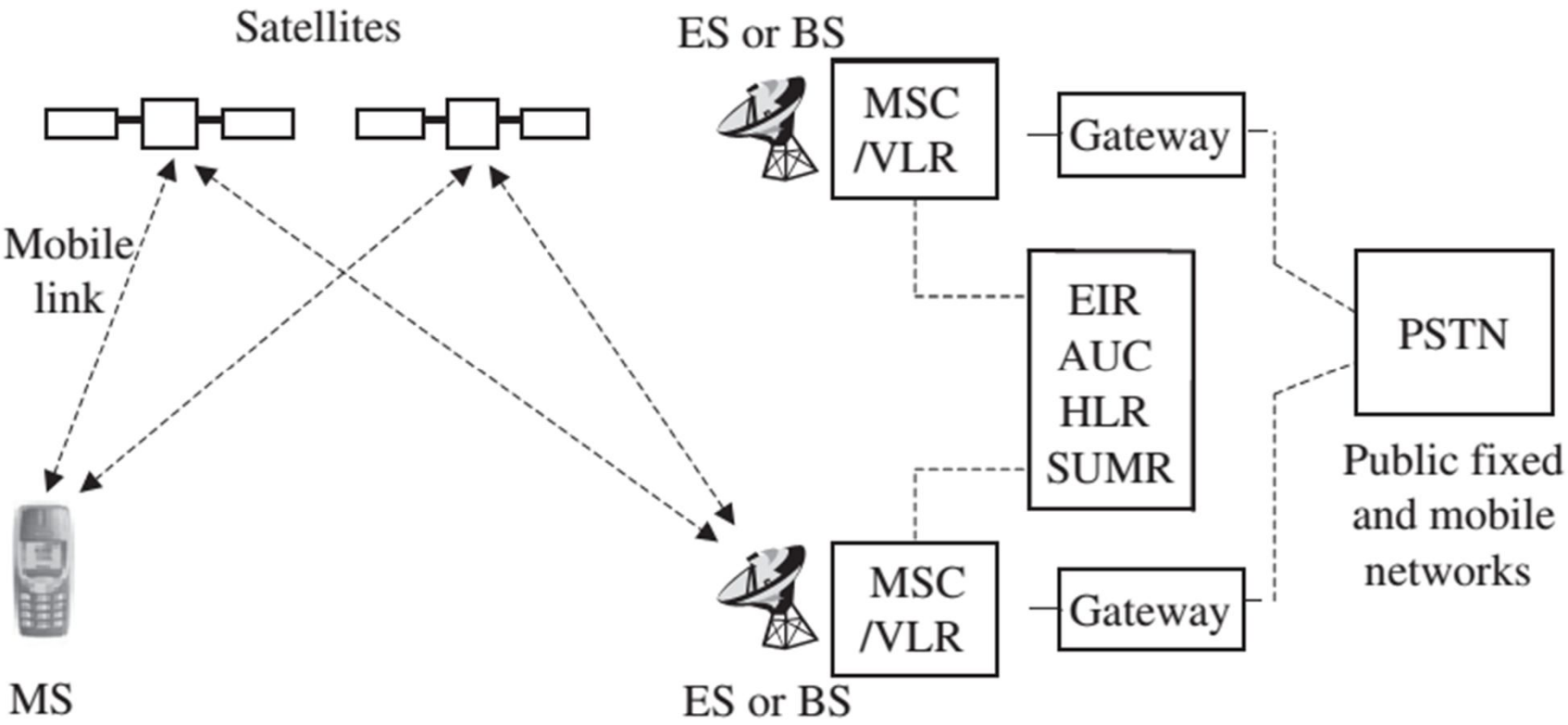

WLL (Wireless Local Loop)

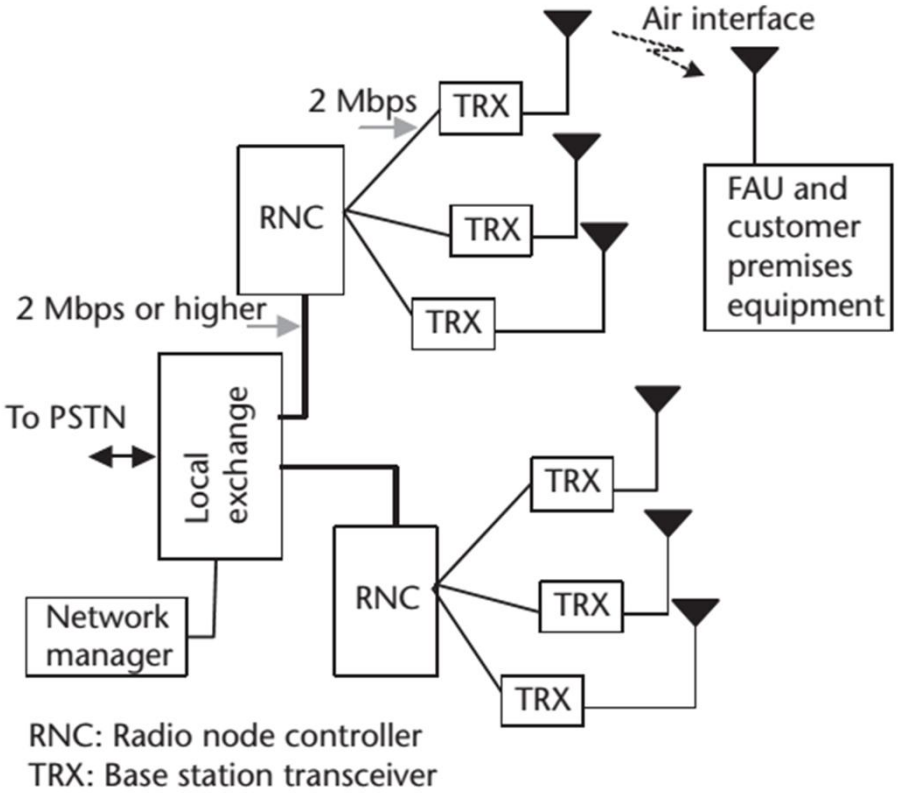

(a)
Overview of a WLL system

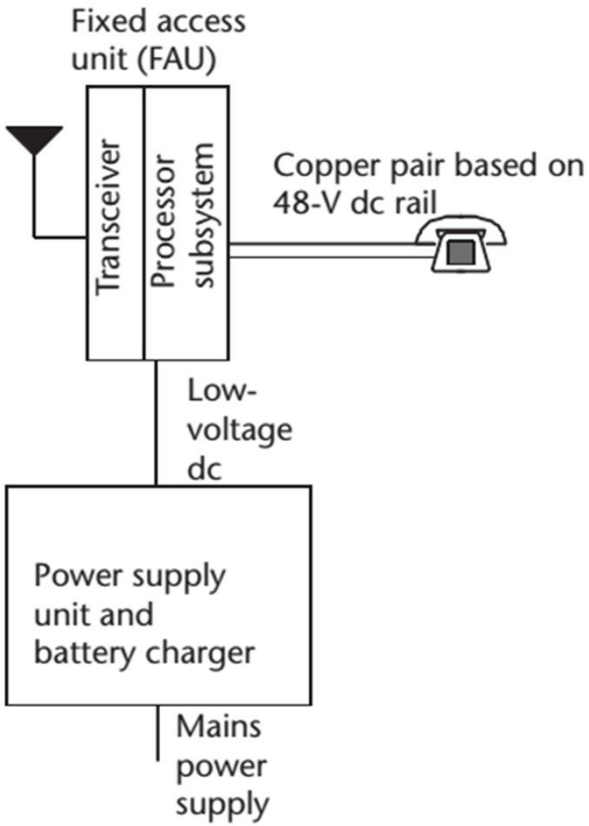

(b)
Typical WLL system components at the customer premises

Cellular Systems vs WLL Systems

Table 5.1 Comparison of Cellular and WLL Environments

Cellular Environment	*WLL Environment*
Mobility (subscriber location, hand off, roaming) must be supported	Mobility is not an essential requirement
Line of sight between the mobile and the base station does not exist	Line of sight can be achieved by suitable base station and antenna spacing
Poorer quality than wireline service is acceptable	Quality must be equivalent to wireline services

WLAN
(Wireless Local Area Network)

- WLAN berasal dari jaringan komputer berbasis IP (*internet protocol*).
- Standar WLAN adlh keluarga standar IEEE 802.11, yaitu: IEEE 802.11a, IEEE 802.11b, IEEE 802.11g, IEEE 802.11n, dll.
- Pita frekuensi yg digunakan adlh *unlicense frequency band* 2.4 GHz dan 5 GHz.
- Disebut jg dgn WiFi (Wireless Fidelity).

WLAN (lanjutan)

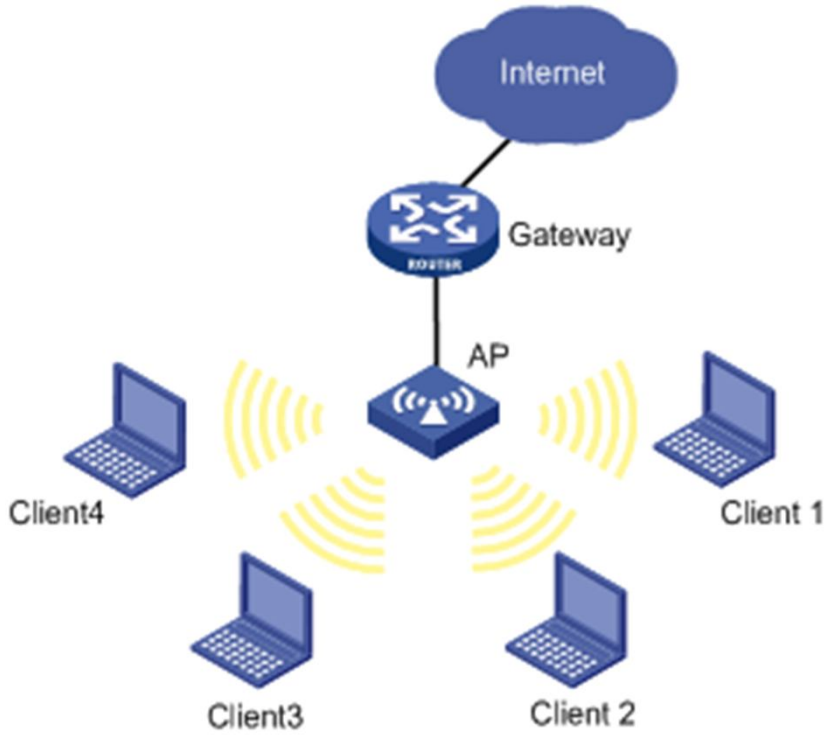

Spesifikasi Wi-Fi

Spesifikasi	Kecepatan	Frekuensi Band	Cocok dengan
802.11b	11 Mb/s	~2.4 GHz	b
802.11a	54 Mb/s	~5 GHz	a
802.11g	54 Mb/s	~2.4 GHz	b, g
802.11n	100 Mb/s	~2.4 GHz	b, g, n

WiMAX

(Worldwide Interoperability for Microwave Access)

- WiMAX adlh istilah utk jaringan berbasis Standar IEEE 802.16
- Disebut jg *Broadband Wireless Access* (BWA)
- Dikategorikan ke dlm MAN *(metropolitan area network)*
- Standar IEEE 802.16d → Fixed WiMAX (3G)
- Standar IEEE 802.16e → Mobile WiMAX (3.9G)
- Standar IEEE 802.16m → WiMAX-2 (4G)

Perbandingan Teknologi Wireless

Perbandingan Perkembangan Teknologi Wireless

	WiFi 802.11g	WiMAX 802.16-2004*	WiMAX 802.16e	CDMA2000 1x EV-DO	WCDMA/ UMTS
Approximate max reach (dependent on many factors)	100 Meters	8 Km	5 Km	*	*
Maximum throughput	54 Mbps	75 Mbps (20 MHz band)	30 Mbps (10 MHz band)	3.1 Mbps (EVDO Rev. A)	2 Mbps (10+ Mbps for HSDPA)
Typical Frequency bands	2.4 GHz	2–11 GHz	2–6 GHz	1900 MHz	1800,1900,2100 MHz
Application	Wireless LAN	Fixed Wireless Broadband (eg-DSL alternative)	Portable Wireless Broadband	Mobile Wireless Broadband	Mobile Wireless Broadband

Perbandingan Teknologi Wireless (2)

Table 1.2 Comparison of WiMAX with Other Broadband Wireless Technologies

Parameter	Fixed WiMAX	Mobile WiMAX	HSPA	1x EV-DO Rev A	Wi-Fi
Standards	IEEE 802.16-2004	IEEE 802.16e-2005	3GPP Release 6	3GPP2	IEEE 802.11a/g/n
Peak down link data rate	9.4Mbps in 3.5MHz with 3:1 DL-to-UL ratio TDD; 6.1Mbps with 1:1	46Mbps[a] with 3:1 DL- to-UL ratio TDD; 32Mbps with 1:1	14.4Mbps using all 15 codes; 7.2Mbps with 10 codes	3.1Mbps; Rev. B will support 4.9Mbps	54 Mbps[b] shared using 802.11a/g; more than 100Mbps peak layer 2 through-put using 802.11n
Peak uplink data rate	3.3Mbps in 3.5MHz using 3:1 DL-to-UL ratio; 6.5Mbps with 1:1	7Mbps in 10MHz using 3:1 DL-to-UL ratio; 4Mbps using 1:1	1.4Mbps ini-tially; 5.8Mbps later	1.8Mbps	
Bandwidth	3.5MHz and 7MHz in 3.5GHz band; 10MHz in 5.8GHz band	3.5MHz, 7MHz, 5MHz, 10MHz, and 8.75MHz initially	5MHz	1.25MHz	20MHz for 802.11a/g; 20/40MHz for 802.11n

Lanjutan:

Parameter	Fixed WiMAX	Mobile WiMAX	HSPA	1x EV-DO Rev A	Wi-Fi
Modulation	QPSK, 16 QAM, 64 QAM	QPSK, 16 QAM, 64 QAM	QPSK, 16 QAM	QPSK, 8 PSK, 16 QAM	BPSK, QPSK, 16 QAM, 64 QAM
Multiplexing	TDM	TDM/OFDMA	TDM/CDMA	TDM/ CDMA	CSMA
Duplexing	TDD, FDD	TDD initially	FDD	FDD	TDD
Frequency	3.5GHz and 5.8GHz initially	2.3GHz, 2.5GHz, and 3.5GHz initially	800/900/1,800/ 1,900/ 2,100MHz	800/900/ 1,800/ 1,900MHz	2.4GHz, 5GHz
Coverage (typical)	3–5 miles	< 2 miles	1–3 miles	1–3 miles	< 100 ft indoors; < 1000 ft outdoors
Mobility	Not applicable	Mid	High	High	Low

a. Assumes 2 × 2 MIMO and a 10MHz channel.

b. Due to inefficient CSMA MAC, this typically translates to only ~20Mbps to 25Mbps layer 2 throughput.

PR-11

1. Jelaskan perbedaan antara jaringan akses dan jaringan transport! Serta berikan contoh, masing-masing minimal tiga contoh!
2. Uraikan perkembangan teknologi jaringan akses pada *local loop* PSTN!
3. Jelaskan perbedaan antara LAN Ethernet dan LAN Token Ring!
4. Berikan empat contoh jaringan akses nirkabel *(wireless access)* dan jelaskan perbedaan antar keempat jaringan tersebut!

Sekian, terima kasih, semoga berkah.

Ada pertanyaan?

Softcopy bahan kuliah tersedia di **http://adf.ly/1Yc3US** dan **http://repository.unimal.ac.id**